BF10K

1	2	3	4	5
GL1955	**VITE TBEI M5x20mm** SKRUTKA SCREW VIS SCHRAUBE TORNILLO	**VITE TBEI M5x30mm** SKRUTKA SCREW VIS SCHRAUBE TORNILLO	**DISTANZIALE Ø8.5x7** **Foro 6mm** DISTANCNY STĹPIK SPACER ENTRETOISE DISTANZSTUECK DISTANCIADOR	**PARTICOLARI INCLUSI NELLA BORSA TANKLOCK** KOMPONENTY SÚČASŤOU BALENIA TANKLOCK COMPONENTS INCLUDED IN THE TANKLOCK BAG PIÈCES INCLUES DANS LA TANKLOCK BAG TEILE INKLUDIERT IN DER TANKLOCK TASCHE DESPIECES INCLUIDOS EN LA TANKLOCK BAG
Q.TY n.1	**Q.TY n.2**	**Q.TY n.2**	**Q.TY n.4**	

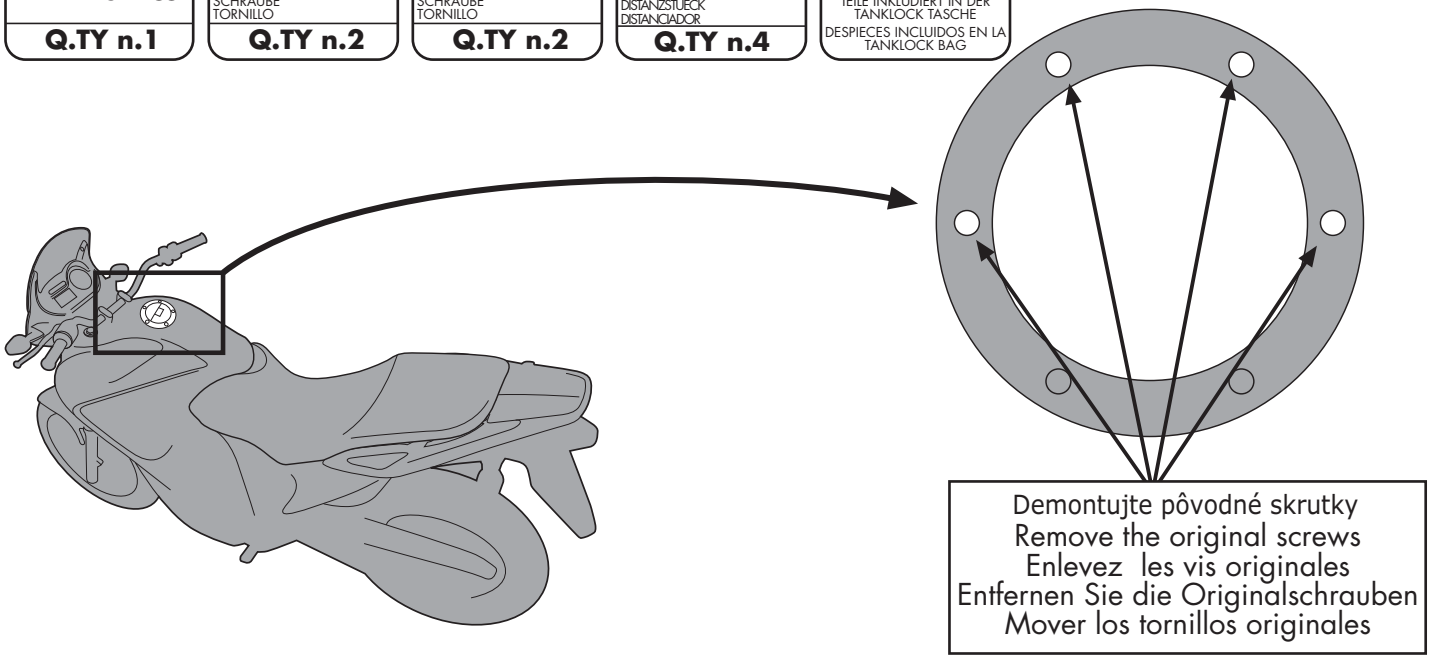

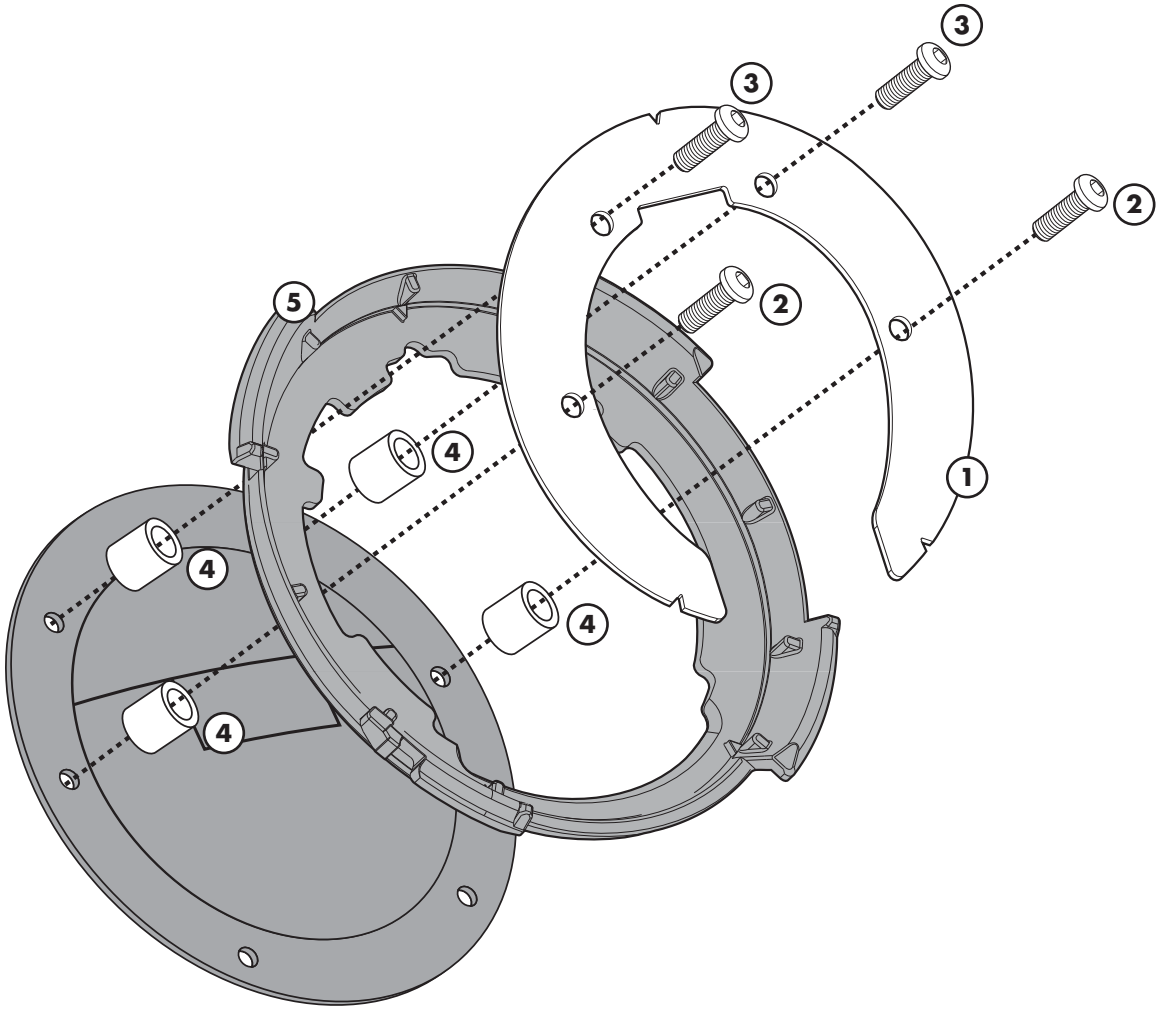

© Copyright 14122011AR-Rev00, **1**/1